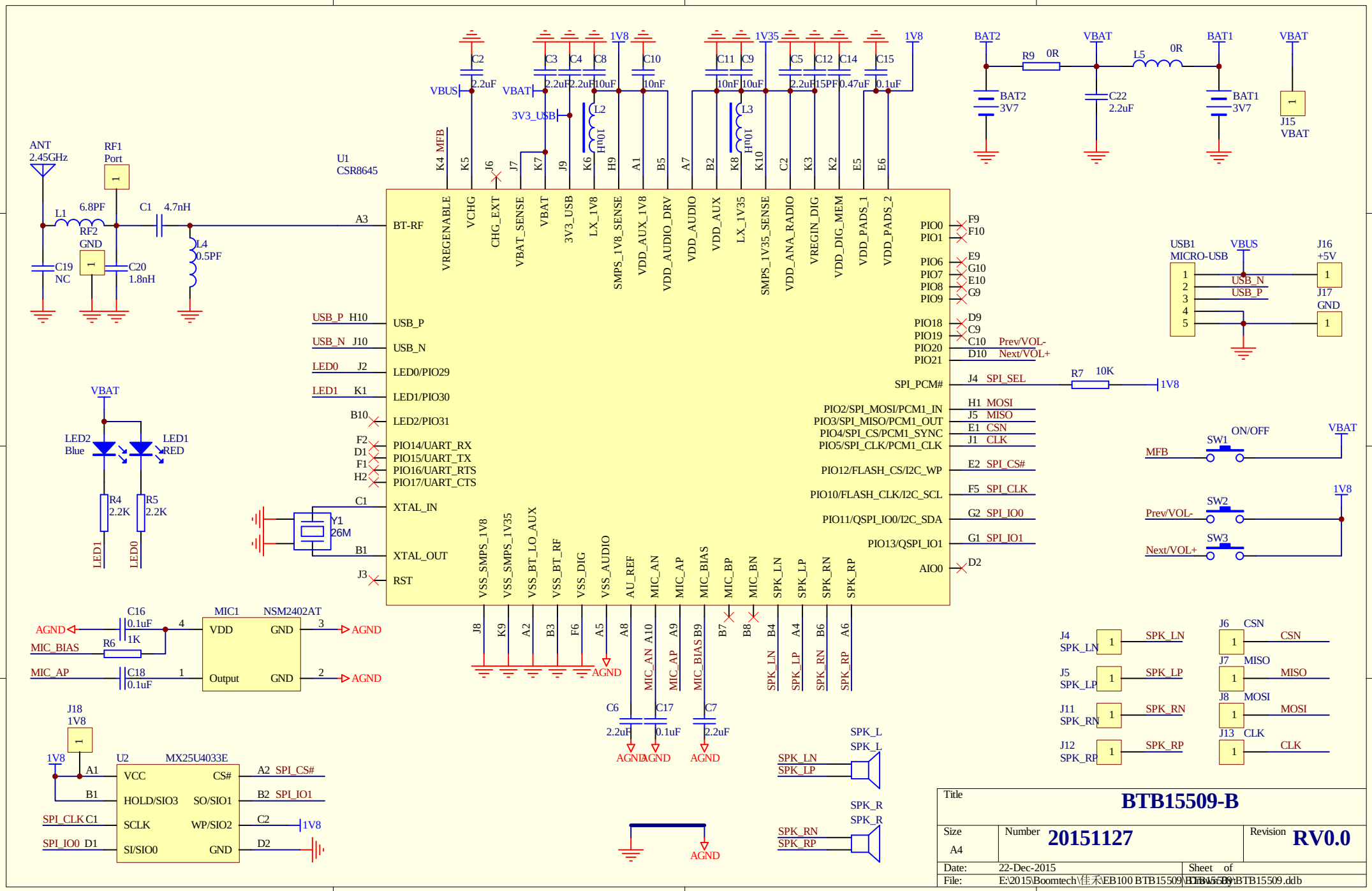

Title	**BTB15509-B**		
Size A4	Number **20151127**		Revision **RV0.0**
Date: 22-Dec-2015		Sheet of	
File: E:\2015\Boomtech\佳禾\EB100 BTB15509\BTB15509\BTB15509.ddb			